Southwest Florida Water Management District

A Do-It-Yourself Guide to

Florida-Friendly Fertilizing

Table of Contents

You Can Have a Healthy Lawn and Healthy Water ..... Page 1

Why Fertilize Your Lawn? ..... Page 2

Step 1 — Getting Ready to Fertilize ..... Page 3

- Test Your Soil
- Know When to Apply Fertilizer

Step 2 — Determining How Much to Buy ..... Page 5

Step 3 — Selecting Fertilizer ..... Page 6

- Read the Label
- Choose Slow-Release Fertilizer
- Tips for Newly Planted Turf
- Additional Tips
- Labeling Requirements Rule

Step 4 — Applying Fertilizer ..... Page 9

- Calculate Application Rates
- Apply Using a Spreader
- Water-In Fertilizer

Step 5 — Maintaining a Healthy Lawn ..... Page 12

- When Mowing
- When Watering
- Irrigation System Tips

Resources ..... Page 15

Glossary ..... Page 16

Tips to Remember ..... Page 17

You Can Have a Healthy Lawn and Healthy Water

The Southwest Florida Water Management District (District) manages the water resources for all or part of 16 counties in west-central Florida. The goal of the District is to meet the water needs of current and future water users while protecting and preserving the water resources within its boundaries.

Recent studies have shown that nitrate levels are rising in many local water bodies. Nitrate is a form of **nitrogen** that is found in inorganic fertilizers. Nitrogen is needed to help lawns stay healthy. When fertilizer is applied correctly, the grass will use all the nitrogen. If applied incorrectly, nitrogen can **leach** into our groundwater or wash off the land and into lakes, rivers and the gulf. Once in our water bodies, **nutrients** from fertilizer may cause algae to grow. Algae can form large blooms that shade out beneficial aquatic plants and use oxygen that fish need to survive.

You can help protect water quality and have a beautiful lawn by following the Florida-friendly fertilizing guidelines* outlined in this booklet. Check with your local city or county to see if your area has a more restrictive fertilizer ordinance. Visit *WaterMatters.org/fertilizing* for detailed information on fertilizing for your grass species, your location in the state and your desired level of lawn care.

Fertilizing appropriately is one of the nine Florida-Friendly Landscaping™ principles — a set of guidelines that help protect natural resources while having a beautiful landscape. For more information, visit *WaterMatters.org/yards/*.

** Guidelines established by the University of Florida's Institute of Food and Agricultural Sciences (UF/IFAS) and the Florida Department of Environmental Protection (FDEP).*

See glossary on page 16 for definitions of bolded words.

Why Fertilize Your Lawn?

Fertilizers are designed to make your lawn green, healthy and more stress-tolerant. To maintain health, turfgrass needs nutrients, some of which are supplied by your soil. In some cases, fertilizer is necessary because your soil cannot supply the grass with all the nutrients it needs to stay healthy and green over the years. When needed, fertilizer should be applied according to UF/IFAS and FDEP guidelines. If applied correctly, fertilizer can help your lawn stay healthy by:

- Increasing leaf and root growth.
- Aiding in the recovery from pest damage and environmental stresses.
- Reducing and controlling weeds.
- Replacing nutrients lost to plant growth and leaching.

Florida-Friendly Fertilizing TIP

If your landscape is healthy and its appearance is pleasing, you may not need to fertilize the entire site, only problem areas. Take samples of problem areas to your local Extension office to check for pests and pH deficiencies.

STEP 1 GETTING READY TO FERTILIZE

Test Your Soil

A good approach to proper fertilization is to start with a soil test. Many Florida soils are naturally high in **phosphorus**, one of three major nutrients in fertilizer. If your soil test shows an adequate level of phosphorus, choose a fertilizer blend that does not contain it. Your soil test will also tell you about your soil's pH (acidity or alkalinity) levels and other nutrient levels. You can get information on obtaining a soil test from your county Extension office or visit *WaterMatters.org/yards*.

Know When to Apply Fertilizer

To prevent fertilizer from washing into water bodies, it's important to know the right time to fertilize. Follow these tips before fertilizing:

- Consider the time of year, climate, soil type and, most important, type of grass and health or condition of the lawn before applying fertilizer.
- Fertilize only when the grass is actively growing. For instance, during the winter, grass is **dormant** in many areas of Florida; therefore, fertilizer is not necessary. Fertilizer applied when grass is not growing wastes your money and time, since it will not be beneficially used by the grass. Instead, it will leach through the soil or run off and pollute nearby water bodies.

- If your lawn has problem areas, find out if this is related to a pest, soil or environmental problem such as excess shade or the uneven distribution of irrigation water. These problems should be corrected and not just masked by fertilization.
- If your household uses reclaimed water, check with your utility to determine if your reclaimed water has nutrients such as nitrogen and phosphorus, which are also in fertilizer. If so, you may not need to fertilize as much.
- Do not fertilize if rain is predicted in the next 24–36 hours or when a heavy rain, tropical storm, hurricane or flood is predicted.

STEP 2 DETERMINING HOW MUCH TO BUY

To avoid storing leftover fertilizer, decide how much you need before you make a purchase. Don't guess! Measure your property and calculate the total square footage of turfgrass. Do not include landscape plants in the area to be fertilized.

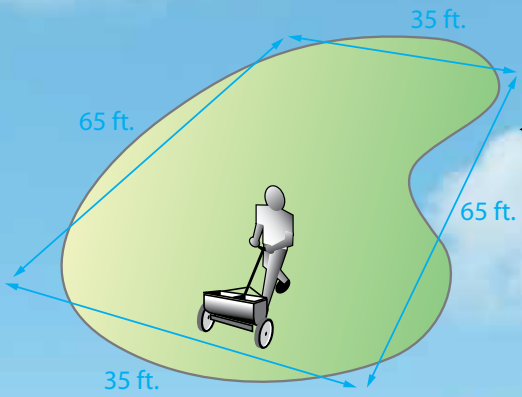

◀ **65 ft. x 35 ft. = 2,275 square ft.**

Figure 1 – If the lawn is made up of irregular-shaped areas, approximate a square or rectangular shape and use these measurements for the calculation.

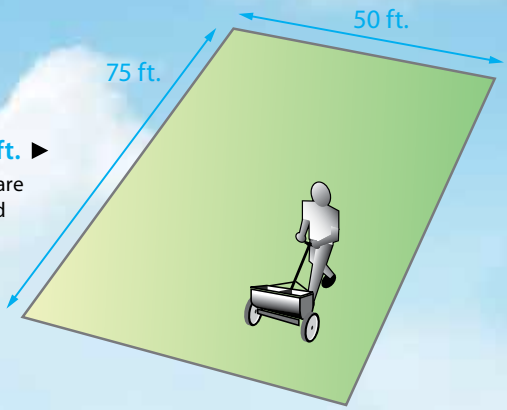

75 ft. x 50 ft. = 3,750 square ft. ▶

Figure 2 – If the lawn is a simple square or rectangle, multiply the length and width (in feet).

STEP 3 SELECTING FERTILIZER

Read the Label

All fertilizer labels have three bold numbers. The first number on the label represents nitrogen, the second number represents phosphorus and the third number represents **potassium**. These are the three major nutrients your lawn needs to thrive.

In general, select a fertilizer where the first and third numbers on the label are equal or in a 2:1 ratio and the middle number is zero or as low as possible.

Look for a fertilizer where the ratio of nitrogen to phosphorus (the first to second number) is a minimum of 4 to 1. For example, a 12-3-10 and a 15-0-15 fertilizer would follow this recommendation.

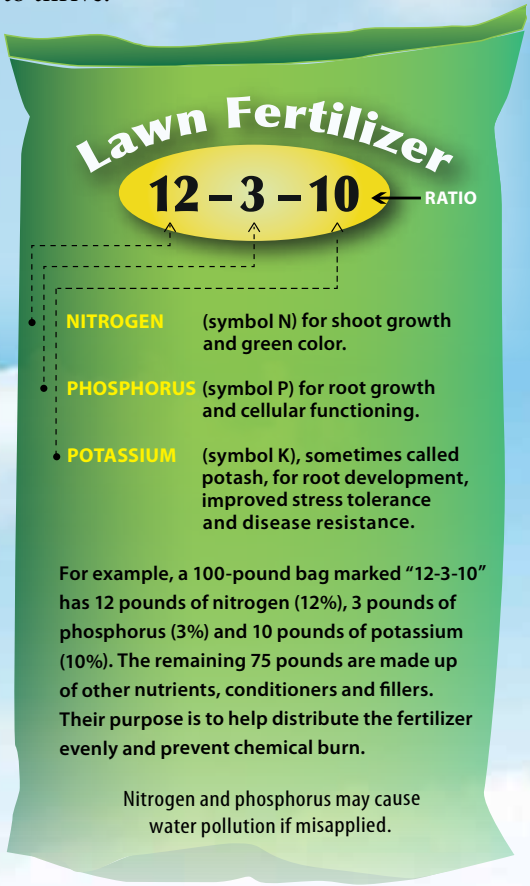

Choose Slow-Release Fertilizer

Most home lawn fertilizers contain some slow-release nitrogen. It takes longer for your yard to benefit from slow-release nitrogen, but the effects will last longer. Many of these fertilizers provide fertilization for 60 days or longer, depending on environmental conditions. As a result, fewer nutrients may be wasted or lost as **pollutants**.

To find a **slow-release fertilizer**, look for these terms on the product or fertilizer tag for nitrogen:

- Timed-release, slow-release or controlled-release
- Water insoluble nitrogen
- Isobutylidene diurea (IBDU)
- Ureaform (UF)
- Nitroform
- Sulfur-, polymer-, plastic- or resin-coated urea

Tips for Newly Planted Turf

- Do not fertilize newly planted lawns (whether seeded or sodded) until 30–60 days after planting. This ensures that there is an active root system to absorb the nutrients. Apply a complete (nitrogen, phosphorus and potassium) slow-release nitrogen fertilizer to provide 1 pound of actual nitrogen per 1,000 square feet.
- After the initial fertilization, follow UF/IFAS guidelines for your grass species for fertilizing established turf.

Additional Tips

- Do not use weed and feed products. They may harm landscape plants if roots extend into the lawn area.
- Consider applying a **soluble** or **chelated** iron source to green the lawn without increasing growth in the summer.
- Avoid liquid and soluble nitrogen fertilizer. These products should be used only by professional turfgrass managers.

Labeling Requirements Rule

The Florida Department of Agriculture and Consumer Services passed a rule regulating labeling requirements in the state for urban turf fertilizers. The new labeling requirements will make it easier for homeowners to find lawn fertilizers with both slow-release nitrogen and low phosphorus. This rule is intended to reduce potential pollution that might result from application of excess fertilizer to lawns.

- *Rule for phosphorus* — application rates are not to exceed 0.25 pound per 1,000 square feet per application and are not to exceed 0.5 pound of phosphorus per 1,000 square feet per year.

- *Rule for nitrogen* — application rates for slow-release nitrogen are not to exceed 1 pound per 1,000 square feet per application. Application rates for quick-release nitrogen are not to exceed 0.7 pound per 1,000 square feet per application.

Florida-Friendly Fertilizing TIP

Do not over-fertilize. Repeatedly using large amounts of nitrogen fertilizer can increase pests and environmental stress problems.

STEP 4 APPLYING FERTILIZER

When applying fertilizer, the most important thing to remember is to read and follow the instructions on the fertilizer bag. Proper application will ensure maximum coverage, resulting in a healthy lawn while protecting water bodies.

Calculate Application Rates

To determine the correct amount of fertilizer per 1,000 square feet, divide 100 by the percentage of nitrogen in the bag. For example, a fertilizer with a 15-0-15 label contains 15% nitrogen, 0% phosphorus and 15% potassium. Divide 100 by 15 to get 6.6; this is the number of pounds of slow-release fertilizer needed to apply one pound of nitrogen per 1,000 square feet. This works for any fertilizer product or amount of nitrogen.

Nitrogen application rates vary according to type of turf and location in the state. Please visit *WaterMatters.org/fertilizing* for more information on calculating application rates.

Apply Using a Spreader

- Overlap your spread pattern by applying half the fertilizer in one direction and the rest in the opposite direction. This will ensure an even application and avoid the appearance of a striped lawn. Break up any clumps so that the fertilizer will not get clogged in the spreader.

- Turn off the spreader before stopping and when making turns. Then, turn it back on after you have resumed walking. Shut off the spreader when passing over pavement.
- Use a deflection shield when using a spreader near sidewalks, driveways and water bodies. This will avoid spreading fertilizer granules onto **impervious** surfaces or into water bodies.
- Clean spreader on the lawn, not on the sidewalk or driveway. Fertilizer granules should never be left on impervious surfaces.

Water-In Fertilizer

Water-in your fertilizer after application with no more than ¼ inch of water. To determine how much this is, perform a **catch-can test**. Do this by placing empty cat food or tuna cans around the perimeter of your sprinkler or irrigation system and time how long it takes to fill them to this depth (¼ inch). Do this before fertilizing so that you know how long to run the system. This will put the nutrients at root level, where they can be taken up most efficiently. Watering-in with more water than ¼ inch can result in fertilizer leaching more rapidly through the soil.

Florida-Friendly Fertilizing TIPS

- Use only the amount of fertilizer that is recommended. More is NOT better.
- Sweep up fertilizer spills and put back in bag.
- Leave a 10-foot no-**pesticide**, no-fertilizer zone between the fertilized area and a water body.

STEP 5 MAINTAINING A HEALTHY LAWN

Proper lawn maintenance is vital for the long-term health of your lawn. Appropriate mowing and watering practices must occur so your lawn will have a healthy root system, be more **drought-tolerant** and be able to resist pests and disease.

When Mowing

- Never remove more than one-third of the leaf blade at any one time. Cutting too much of the leaf blade can stress your lawn. If your lawn is under any stress (shade, traffic, drought, etc.), raise the mowing height.
- Mow at the highest height for your grass species. See chart for specific types. Mowing at lower heights can result in a shallow root system.
- Keep your mower blades sharp. A dull blade tears the grass blades, making the grass unattractive and prone to insect or disease invasion.
- Do not mow when lawn is wet. This is dangerous for you, tough on the mower and bad for the grass.
- If you miss a weekly mowing, raise the mower height so you do not remove too much of the

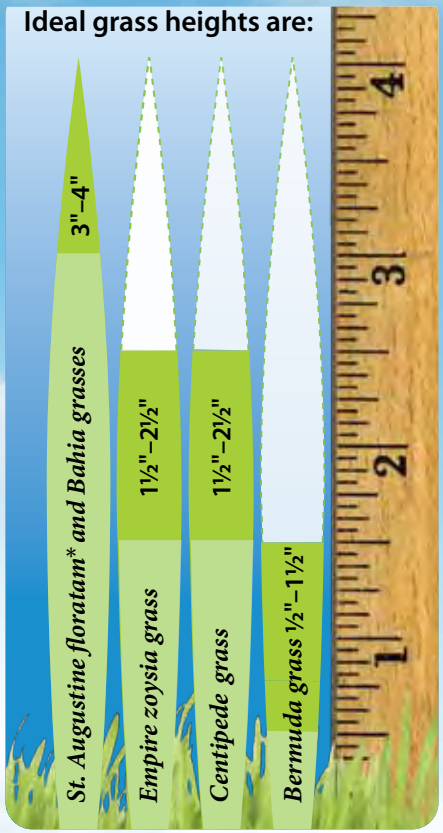

Credit: Florida-Friendly Landscaping™ Best Management Practices for Protection of Water Resources by the Green Industries.

**Dwarf varieties of St. Augustine grass are the only cultivars of this species that should be mowed at 2–2½ inches.*

grass blade. Bring the height back down to the recommended level gradually over the next few weeks.

- Keep grass clippings, vegetative material and vegetative debris away from storm drains, ditches, water bodies and roadways.
- Leave grass clippings on the ground. They do not contribute to **thatch**, and they return nutrients and organic matter back to the lawn.

When Watering

- Irrigate around sunrise or in the early morning hours. You want the leaf blades to dry out fully during the day.
- Do not apply water to just wet the top of the soil; this will result in a shallow root system. Apply enough water to encourage deeper root growth.
- In most parts of Florida, irrigate to apply ½– ¾ inch of water. Heavier clay soils need only about ½ inch of water while sandy soils may need up to ¾ inch of water.

Irrigation System Tips

More lawns are damaged by improper irrigation practices than by any other practice. Take control of your automatic irrigation system using these tips:

- Florida law requires that all irrigation systems have working rain sensors to override the system when enough rain has fallen. Check your rain sensor to see if it's installed correctly and still working.
- Sprinkler heads are easily misaligned or broken, which can lead to improper water application to your lawn and may waste water as **runoff**. Inspect your irrigation system regularly.

- To find out how long you need to run your irrigation system, perform a catch-can test (p. 10). If applying these amounts causes runoff, reduce the amount of water applied. In some soils it may be necessary to first apply half the amount needed, let it **percolate** through the soil, and then apply the remaining water a short time later.
- Turn your system to the "off" or "manual" position. Water only when leaf blades start to fold in half lengthwise or when footprints remain visible for a few minutes. Irrigate when about 30 percent of the lawn shows these signs, unless rain is forecast in the next 24 hours.

Seasonal Watering Tips

Regardless of the season, grass needs no more than ½ to ¾ inch of water each time you irrigate. Irrigation frequency will vary by location, soil type, amount of shade, temperature and other lawn characteristics and stresses.

- In the winter months, grass growth is less active and may need to be watered every 10 to 14 days. Overwatering in the winter can encourage pests and disease in your lawn.
- In the summer months, grass growth is more active and may need to be watered every 2 to 3 days. However, normal summer rainfall often supplies enough water, so you can operate your irrigation system manually and wait to turn it on as needed.

Resources

For more information on Florida-friendly fertilizing, contact your local Florida-Friendly Landscaping™ coordinator.

Charlotte County
25550 Harbor View Road, Suite 3
Port Charlotte, FL 33980
(941) 764-4340

Citrus County
3650 West Sovereign Path, Suite 1
Lecanto, FL 34461
(352) 527-5700

Hernando County
21030 Cortez Blvd.
Brooksville, FL 34601
(352) 540-6230

Hillsborough County
5339 S. CR 579
Seffner, FL 33584-3334
(813) 744-5519

Levy County
625 N. Hathaway Avenue, Alt. 27
Bronson, FL 32621
(352) 486-5131

Manatee County
1303 17th Street West
Palmetto, FL 34221
(941) 722-4524

Marion County
2232 N.E. Jacksonville Road
Ocala, FL 34470-3615
(352) 671-8412

Pasco County
36702 SR 52
Dade City, FL 33525-5198
(727) 847-8177

Pinellas County
12520 Ulmerton Road
Largo, FL 33774-3695
(727) 582-2108

Polk County
P. O. Box 9005, Drawer HS03
1702 Hwy. 17-98 South
Bartow, FL 33831-9005
(863) 519-8677

Sarasota County
6700 Clark Road
Twin Lakes Park
Sarasota, FL 34241
(941) 861-5000

Sumter County
7620 SR 471, Suite 2
Bushnell, FL 33513-8716
(352) 793-2728

If your county is not listed above, please contact the UF/IFAS Florida-Friendly Landscaping™ program director at (352) 273-4520 or visit *FloridaYards.org*. For more guidance on turfgrass and landscape management, contact FDEP at (850) 245-7508 and ask for a copy of the *Florida-Friendly Best Management Practices for Protection of Water Resources by the Green Industries*.

Glossary

catch-can test – method of measuring the amount and even distribution of water applied to a lawn by an irrigation system

chelated – compounds existing in a form that serves to make micronutrients available for absorption by plants

dormant – not actively growing

drought-tolerant – describes plants that require less water because they are adapted to regions with frequent drought or to soils with low water-holding capacity

impervious – resistant to penetration by fluids or roots

leach – the movement of water soluble substances downward through the soil

nitrogen – an element essential for plant and vegetative growth; however, excessive amounts can lead to water pollution

nutrients – chemical elements and compounds found in the environment that plants and animals need to grow and survive

percolate – to cause water or another liquid to pass through a porous material or small holes

pesticide – a chemical or other substance used to prevent, destroy or repel pests

phosphorus – an element essential for plant growth that promotes flowering and cellular functioning; however, excessive amounts can lead to water pollution

pollutants – substances that make the soil, water or air harmful or generally unusable

potassium – an element essential to plant growth that promotes root development and stress tolerance

runoff – excess water that flows across surfaces rather than soaking in; eventually enters a water body; may pick up and carry a variety of pollutants

slow-release fertilizer – fertilizer that releases its nutrients slowly over a long period of time

soluble – capable of being dissolved

thatch – a layer of dead and living plant matter that accumulates between soil and green leaf tissue in grass, often blocking water and nutrient movement into soil

Tips to Remember

- Use slow-release fertilizers.
- Always follow package directions.
- Fertilize when the grass is actively growing.
- Don't fertilize before a heavy rain.
- Measure your yard to determine how much to buy.

Florida-Friendly Fertilizing

It just makes sense

Balancing Water Needs ... Protecting Water Resources

UF UNIVERSITY of FLORIDA
IFAS Extension

Southwest Florida
Water Management District

WaterMatters.org · 1-800-423-1476

Contributors and Reviewers:

Esen Momol, Ph.D., Director of Florida-Friendly Landscaping™, and Laurie Trenholm, Ph.D., Associate Professor and Turf Specialist

The Southwest Florida Water Management District (District) does not discriminate on the basis of disability. This nondiscrimination policy involves every aspect of the District's functions, including access to and participation in the District's programs and activities. Anyone requiring reasonable accommodation as provided for in the Americans with Disabilities Act should contact the District's Human Resources Director, 2379 Broad St., Brooksville, FL 34604-6899; telephone (352) 796-7211 or 1-800-423-1476 (FL only), ext. 4702; TDD 1-800-231-6103 (FL only); or email *ADACoordinator@WaterMatters.org*.

VISPT 10-10