CONSTRUCTION PLANS FOR:

31st AVENUE ROADWAY & POTABLE WATER IMPROVEMENTS

SECTION 33, TOWNSHIP 31 SOUTH, RANGE 16 EAST
PINELLAS COUNTY, FLORIDA

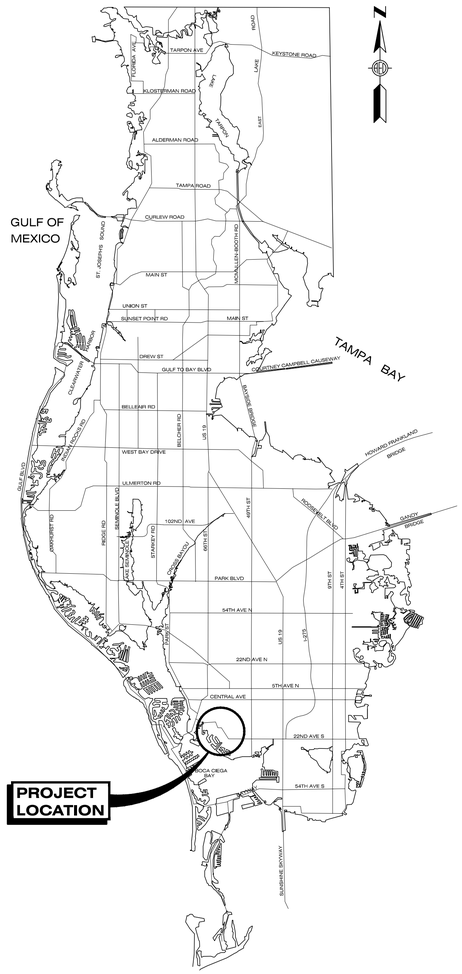

VICINITY MAP
N.T.S.

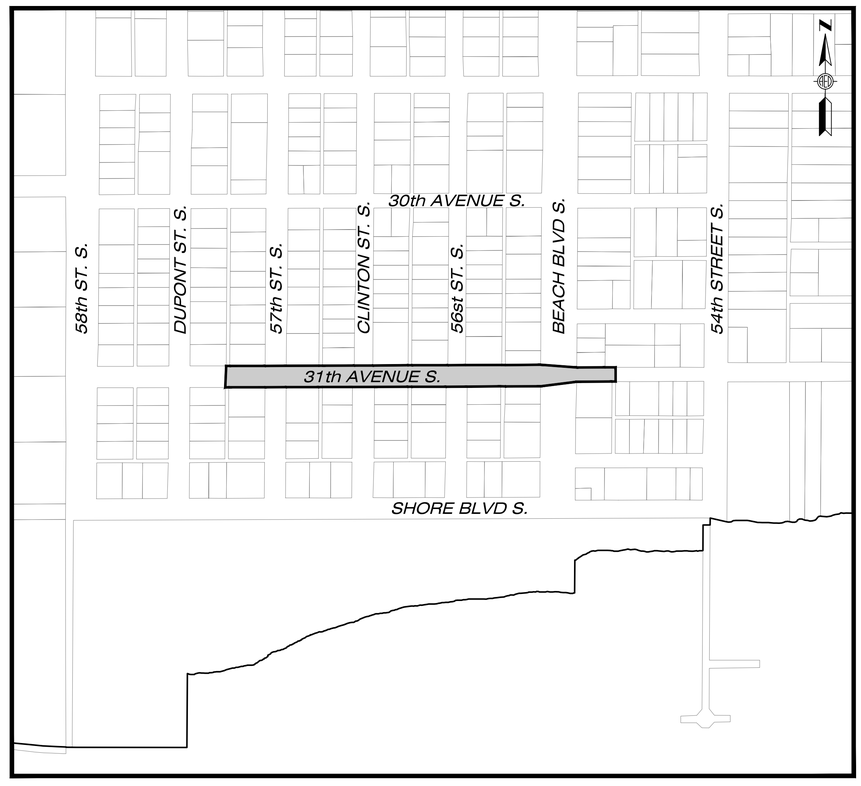

LOCATION MAP
SCALE: 1"=200'

DRAWING INDEX

DWG. NO.	SHEET TITLE
1	COVER SHEET
2	KEYMAP & GENERAL NOTES
3	PLAN VIEW
4	PLAN VIEW
5	GENERAL DETAILS
6	GENERAL DETAILS

FINAL PLANS

INVESTIGATE BEFORE YOU EXCAVATE

CALL LOCAL PUBLIC UTILITY NOTIFICATION CENTER
TOLL FREE
1-800-432-4770
MIN. 48 HOURS BEFORE YOU EXCAVATE

Prepared for:

CITY OF GULFPORT, FLORIDA
2401-53rd STREET SOUTH
GULFPORT, FL 33707

Prepared By:
ADVANCED ENGINEERING & DESIGN, INC.
CIVIL • MUNICIPAL • SITE DESIGN • PERMITTING • PLANNING
3931 68th Avenue N. • Pinellas Park, FL • Phone:727.526.9158 • Fax:727.527.9683

Date: 12/19/2006 2:44 PM Filename: \\AED-SERVER\Shared Folders\CADD\Municipal\Gulfport\15.GP-53 (31st Ave RW & PW Imp)\CADD_Current\01 GP-53_COVER SHEET.dwg

EXISTING LEGEND

FND	FOUND
FCIP	FOUND CAPPED IRON PIPE (SIZE NOTED)
FCIR	FOUND CAPPED IRON ROD (SIZE NOTED)
FCM	FOUND CONCRETE MONUMENT (SIZE NOTED)
FIP	FOUND IRON PIPE (SIZE NOTED)
FIR	FOUND IRON ROD (SIZE NOTED)
FN&D	FOUND NAIL & BRASS DISK
FPP	FOUND PINCHED PIPE (SIZE NOTED)
FRR	FOUND RAILROAD SPIKE
PK	PARKER KAYLON NAIL
SCIR	SET 1/2" CAPPED IRON ROD "LB 4513"
SN&D	SET NAIL & BRASS DISK "LB 4513"
LB	LICENSED BUSINESS
PLS	PROFESSIONAL LAND SURVEYOR
(C)	CALCULATED
(D)	DESCRIPTION
(F)	FIELD MEASURED
(P)	PLAT
PB	PLAT BOOK
PG	PAGE
POB	POINT OF BEGINNING
POC	POINT OF COMMENCEMENT
BFP	BACKFLOW PREVENTER
CLD	CENTERLINE DITCH
DIA.	DIAMETER
DCV	DOUBLE CHECK VALVE
EL	ELEVATION
FFE	FINISH FLOOR ELEVATION
INV	INVERT
No.	NUMBER
ORB	OFFICIAL RECORDS BOOK
R/W	RIGHT OF WAY
TBM	TEMPORARY BENCHMARK
TOB	TOP OF BANK
TOS	TOE OF SLOPE
TYP	TYPICAL
UG	UNDERGROUND
A/C	AIR CONDITIONER
BWF	BARB WIRE FENCE
CLF	CHAIN LINK FENCE
WDF	WOOD PANEL FENCE
C/B	CONCRETE BLOCK
GCG	GRANITE CURB
FCG	F-TYPE CURB AND GUTTER
VCG	VALLEY CURB AND GUTTER
CMP	CORRUGATED METAL PIPE
DIP	DUCTILE IRON PIPE
ERCP	ELLIPTICAL REINFORCED CONCRETE PIPE
HDPE	HIGH DENSITY POLYETHYLENE PIPE
PVC	POLYVINYL CHLORIDE PIPE
RCP	REINFORCED CONCRETE PIPE
EOP	EDGE OF PAVEMENT
CONC	CONCRETE
FES	FLARED END SECTION
MES	MITERED END SECTION
FOC	FIBER OPTIC CABLE
MH	MANHOLE
OHW	OVERHEAD WIRES (CABLE, TELEPHONE, ELECTRICAL)
TRAN	TRANSFORMER
CTV	PAINT OR FLAG MARKING UG CABLE TELEVISION LINE
E	PAINT OR FLAG MARKING UG ELECTRIC
FOC	PAINT OR FLAG MARKING UG FOC
G	PAINT OR FLAG MARKING UG GAS LINE
RCW	PAINT OR FLAG MARKING UG RECLAIMED WATER
S	PAINT OR FLAG MARKING UG SANITARY SEWER
T	PAINT OR FLAG MARKING UG TELEPHONE LINE
VZ	PAINT OR FLAG MARKING UG VERIZON LINE
W	PAINT OR FLAG MARKING UG WATER LINE

BENCHMARK
BOLLARD/POST
BURIED CATV MARKER POST
CABLE TV BOX
CONCRETE LIGHT POLE
CONCRETE UTILITY POLE
CLEANOUT
DECORATIVE LIGHT
ELECTRIC BOX
ELECTRIC MANHOLE
ELECTRIC METER
FIBER OPTIC CABLE BOX
FIRE HYDRANT
GAS MARKER POST
GAS METER/REGULATOR
GAS VALVE
GREASE-TRAP MANHOLE
GUY WIRE
IRRIGATION CONTROL VALVE
MAIL BOX
METAL LIGHT POLE
METAL UTILITY POLE
MONITOR WELL
RECLAIMED WATER METER BOX
RECLAIMED WATER VALVE
ROOF DRAIN
SANITARY MANHOLE
SANITARY VALVE
SIGN
SOIL BORING LOCATION
STORM OR DRAINAGE MANHOLE
STREET LIGHT ACCESS BOX
TELECOMMUNICATIONS MANHOLE
TELEPHONE BOX
TELEPHONE LINE MARKER POST
TRAFFIC SIGNAL ACCESS BOX
TRAFFIC SIGNAL POLE
VERIZON ACCESS BOX
WATER MANHOLE
WATER VALVE
WATER METER BOX
WELL
WOOD LIGHT POLE
WOOD UTILITY POLE

GRAPHIC SCALE
40 20 0 20 40
(IN FEET)
1" = 40'

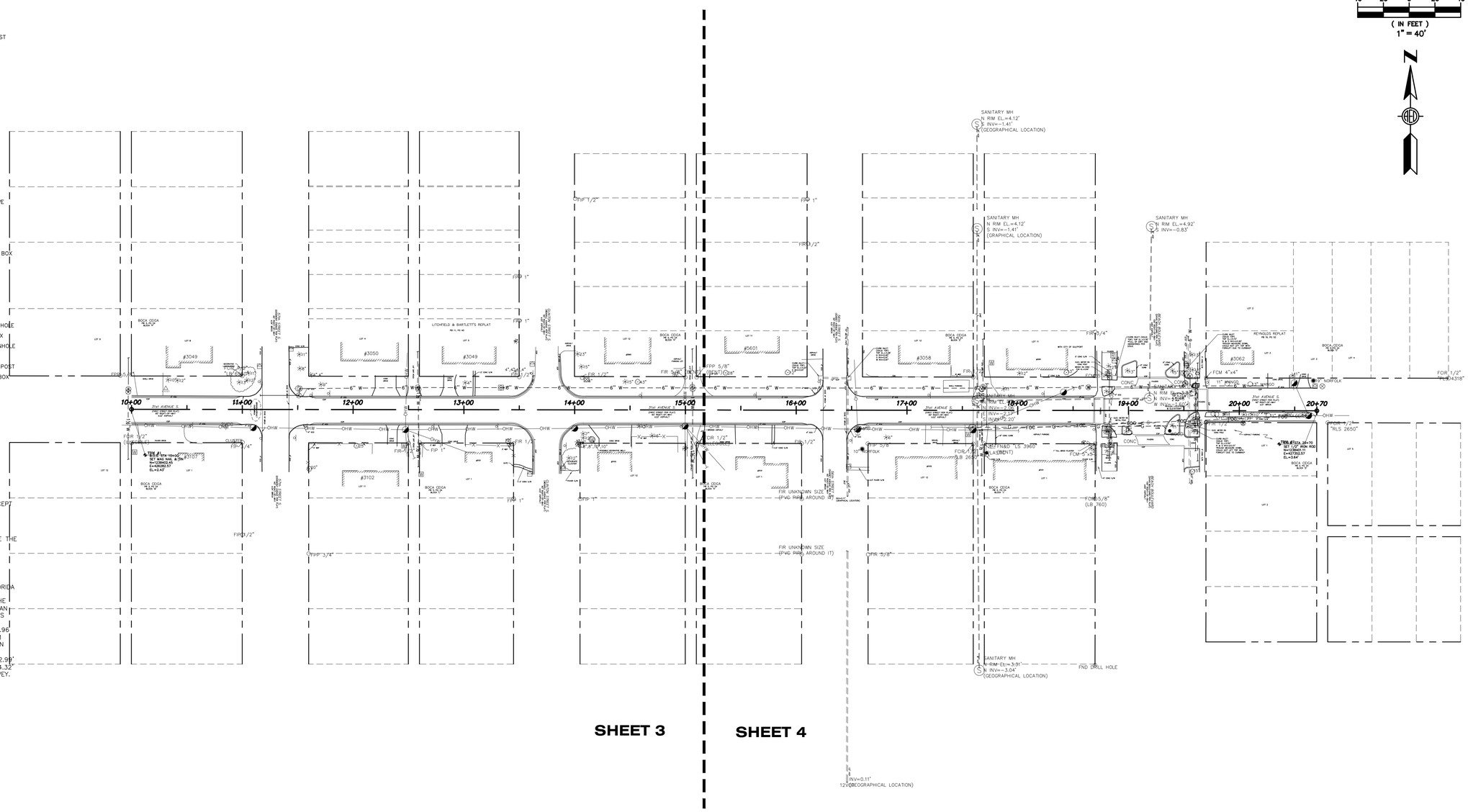

SURVEY NOTES

1. SURVEY CREW: JOHNNY BELAND, DINO SPENDL.
2. NO UNDERGROUND INSTALLATIONS OR IMPROVEMENTS HAVE BEEN LOCATED EXCEPT AS SHOWN.
3. NO INSTRUMENTS OF RECORD REFLECTING EASEMENTS, RIGHT OF WAY AND/OR OWNERSHIP WERE FURNISHED TO THIS SURVEYOR EXCEPT AS SHOWN.
4. THIS SURVEY DOES NOT REFLECT OR DETERMINE OWNERSHIP.
5. USE OF THIS SURVEY BY ANYONE OTHER THAN THOSE PREPARED FOR WILL BE THE RE-USERS SOLE RISK WITHOUT LIABILITY TO THE SURVEYOR.
6. THERE MAY BE ITEMS DRAWN OUT OF SCALE TO GRAPHICALLY SHOW THEIR LOCATION.
7. THE SURVEY WAS PREPARED WITHOUT THE BENEFIT OF A CURRENT TITLE COMMITMENT AND IS SUBJECT TO EASEMENTS, RIGHTS-OF-WAY AND SIMILAR MATTERS OF TITLE.
8. NOT VALID WITHOUT THE SIGNATURE AND THE ORIGINAL RAISED SEAL OF A FLORIDA LICENSED SURVEYOR AND MAPPER.
9. THE HORIZONTAL DATUM WAS BASED ON STATE PLANE VALUES ARE TIED TO THE FLORIDA STATE PLANE COORDINATE SYSTEM (GRID), WEST ZONE NORTH AMERICAN DATUM 1983-1991, ADJUSTMENT 1990, AND WERE DERIVED FROM COORDINATES PUBLISHED BY THE NGS.

a. HORIZONTAL CONTROL POINT No.1: "MENORAH J", N=1,241,807.44, E=429,815.96
b. HORIZONTAL CONTROL POINT No.2: "POWER G", N=1,243,088.38, E=436,387.61

10. ELEVATIONS SHOWN HEREON ARE IN FEET AND REFER TO THE NORTH AMERICAN VERTICAL DATUM OF 1988. (N.A.V.D.)

a. REFERENCE BENCHMARK No.1: NGS BENCHMARK "872 6486 H" ELEVATION = 2.99'
b. REFERENCE BENCHMARK No.2: NGS BENCHMARK "872 6486 2" ELEVATION = 4.32'

11. THIS SURVEY IS FOR TOPOGRAPHIC PURPOSES AND IS NOT A BOUNDARY SURVEY.
12. SURVEY DATE: DECEMBER 29, 2015.

PROPOSED LEGEND

PROP. WATER MAIN
PROPOSED FIRE HYDRANT
PROPOSED WATER VALVE
PROPOSED BLOW OFF ASSEMBLY
PROPOSED CHLORINE INJECTION POINT
PROP. WATER METER & METER BOX
PROPOSED CAP
PROPOSED SAMPLE TAP
CONNECTION TO EXISTING MAIN

CROSSING DETAIL LOCATION
5 / 6
DETAIL NUMBER
SHEET NUMBER

GENERAL NOTES

1. NEW WATER MAIN TO BE INSTALLED WITH 36" COVER MINIMUM.
2. EXISTING & PROPOSED PIPE IS TO BE RESTRAINED PER PLAN DETAILS. (PIPE RESTRAINTS FOR PROPOSED & EXISTING PIPE SHALL BE INCLUDED IN THE COST OF THE PIPE.)
3. NEW 1" POLYLINE WATER SERVICES ARE TO BE INSTALLED AS SHOWN ON PLANS OR AS NEEDED TO RE-ESTABLISH WATER SERVICE.
4. NEW 1" SERVICE LINES SHALL BE INSTALLED VIA OPEN CUT.
5. ALL WATER METERS, METER BOXES, DUAL CHECK VALVES, FIRE HYDRANTS, BACKFLOW ASSEMBLIES, GATE VALVES, 6" & 8" TAPPING VALVES & SLEEVES AND VALVE BOXES WILL BE SUPPLIED BY THE CITY & INSTALLED BY THE CONTRACTOR.
6. ALL EXIST. MAILBOXES IN CONFLICT WITH PROPOSED WATER MAIN ARE TO BE REMOVED AND TEMPORARILY RELOCATED DURING CONSTRUCTION. MAILBOXES ARE TO BE RETURNED TO THEIR ORIGINAL LOCATION AFTER CONSTRUCTION IS COMPLETE.
7. ALL EXIST. SIDEWALKS & DRIVEWAYS DISTURBED DURING CONSTRUCTION MUST BE RESTORED IN-KIND.
8. ALL EXIST. FENCES WITHIN RIGHT-OF-WAY THAT ARE IN CONFLICT WITH NEW WATER MAIN ALIGNMENT MUST BE REMOVED AND RESET IMMEDIATELY UPON INSTALLATION OF WATER MAIN. COORDINATE WITH MR. CLAY LOTT (CITY OF GULFPORT UTILITIES) PRIOR TO REMOVAL AND RELOCATION.
9. CONTRACTOR SHALL MINIMIZE DISTURBANCE TO EXISTING STRUCTURES & IMPROVEMENTS. ALL DISTURBED PROPERTY MUST BE RESTORED IN-KIND.
10. CONTRACTOR TO PROTECT ALL EXISTING CURB.
11. CONTRACTOR SHALL CONTACT DUKE ENERGY TO PROVIDE TEMPORARY POLE SUPPORT IN AREAS WHERE THE PROPOSED WATER MAIN IS WITHIN CLOSE PROXIMITY OF EXISTING POLES.
12. MAINTENANCE OF TRAFFIC SHALL BE IN ACCORDANCE WITH FDOT INDEX #600, #602 & #605.
13. PEDESTRIAN CONTROL SHALL BE IN ACCORDANCE W/FDOT INDEX #660.
14. THE CONTRACTOR SHALL PROVIDE & MAINTAIN A SAFE AND EASILY ACCESSIBLE PAVED OR UNPAVED PATHWAY FOR PEDESTRIAN TRAFFIC THROUGH THE WORK ZONE FOR THE DURATION OF THE CONSTRUCTION PROJECT. IF THE PATHWAY LIES ALONG A DESIGNATED SCHOOL-WALKING ROUTE THEN THE CONTRACTOR MUST PROVIDE ADEQUATE SUPERVISION AND/OR GUIDANCE TO THE SCHOOL AGED STUDENT AS THEY TRAVERSE THRU THE WORK ZONE.
15. LANE CLOSURES ALONG SUBDIVISION STREETS SHALL NOT OCCUR DURING THE PEAK HOUR PERIODS OF 7 TO 9am & 4 TO 6pm.
16. CONTRACTOR SHALL REMOVE ALL 1½" WATER LINES WITHIN THE PROJECT ONCE ALL SERVICES HAVE BEEN TRANSFERRED OVER TO THE NEW WATER MAIN.
17. FIRE HYDRANT PLACEMENT SHALL BE COORDINATED WITH THE CITY OF GULFPORT.
18. PIPE DEFLECTION MAY BE REQUIRED IN ORDER TO INSTALL MAIN AT DEPICTED LOCATIONS.
19. EXISTING WATER METER BOX LOCATIONS ARE SHOWN AS APPROXIMATE. CONTRACTOR SHALL VERIFY ACTUAL FIELD LOCATIONS.
20. EXISTING 6" WATER MAIN HAS BEEN REPORTED AS A CAST IRON LINE.

NO.	REVISIONS	BY	DATE

SCALE:	1"=60'
DRAWN:	S.A.T.
DESIGNED:	A.E.D.
APPROVED:	W.G.R.

ADVANCED ENGINEERING & DESIGN, INC.
CIVIL • MUNICIPAL • SITE DESIGN • PERMITTING • PLANNING

CITY OF GULFPORT
31st AVE. ROADWAY & POTABLE WATER IMPROVEMENTS

KEYMAP & GENERAL NOTES

DATE: 4/18/16
PROJECT NO: 15.GP-53
2

Date: 12/19/2006 2:40 PM Filename: \\AED-SERVER\Shared Folders\CADD\Municipal\Gulfport\15.GP-53 (31st Ave RW & PW Imp)\CADD_Current\02 GP-53_KEYMAP & GENERAL NOTES.dwg

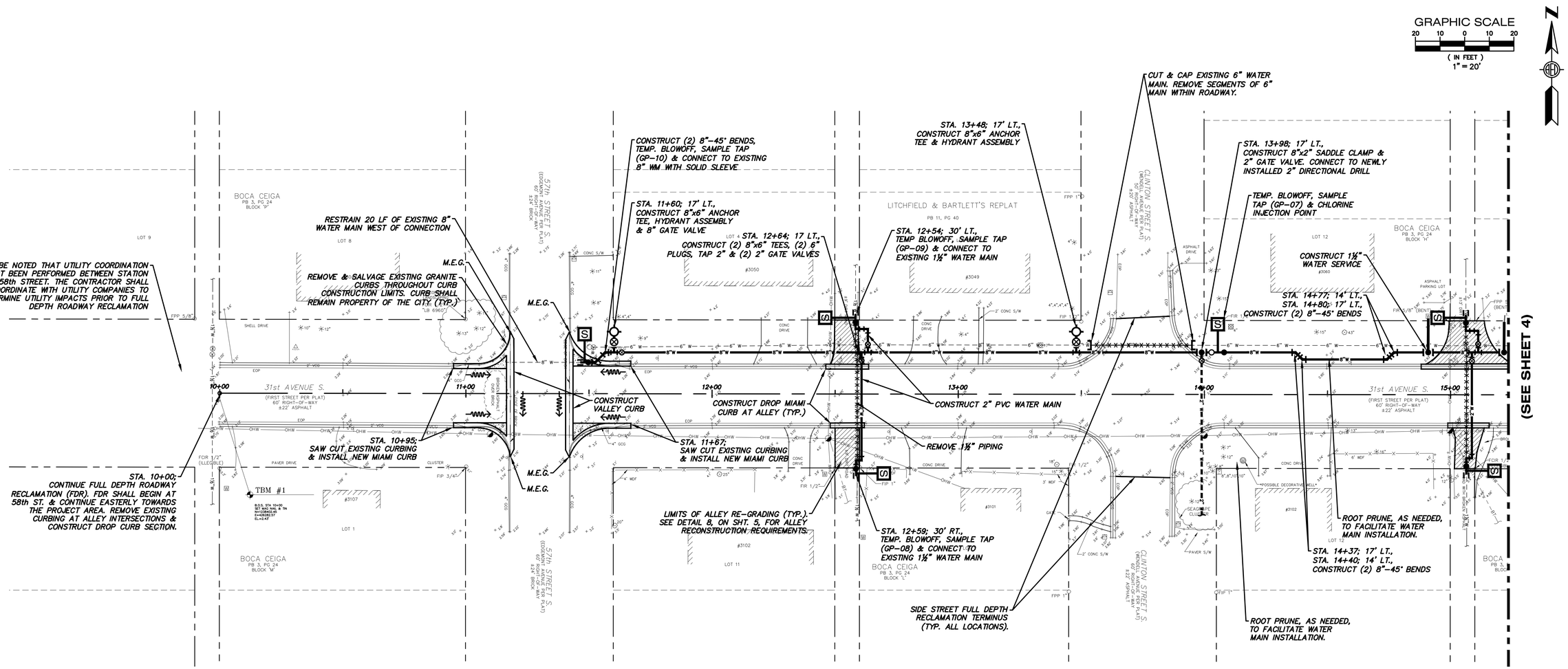

NO.	REVISIONS	BY	DATE

SCALE:	1"=30'
DRAWN:	S.A.T.
DESIGNED:	A.E.D.
APPROVED:	W.G.R.

ADVANCED ENGINEERING & DESIGN, INC.
CIVIL • MUNICIPAL • SITE DESIGN • PERMITTING • PLANNING

CITY OF GULFPORT

31st AVE. ROADWAY & POTABLE WATER IMPROVEMENTS

PLAN VIEW

DATE:	4/18/16
PROJECT NO:	15.GP-53

3

Date: 4/24/2009 11:13 AM Filename: \\AED-SERVER\Shared Folders\CADD\Municipal\Gulfport\15.GP-53 (31st Ave RW & PW Imp)\CADD_Current\03-04 GP-53_Plans.dwg

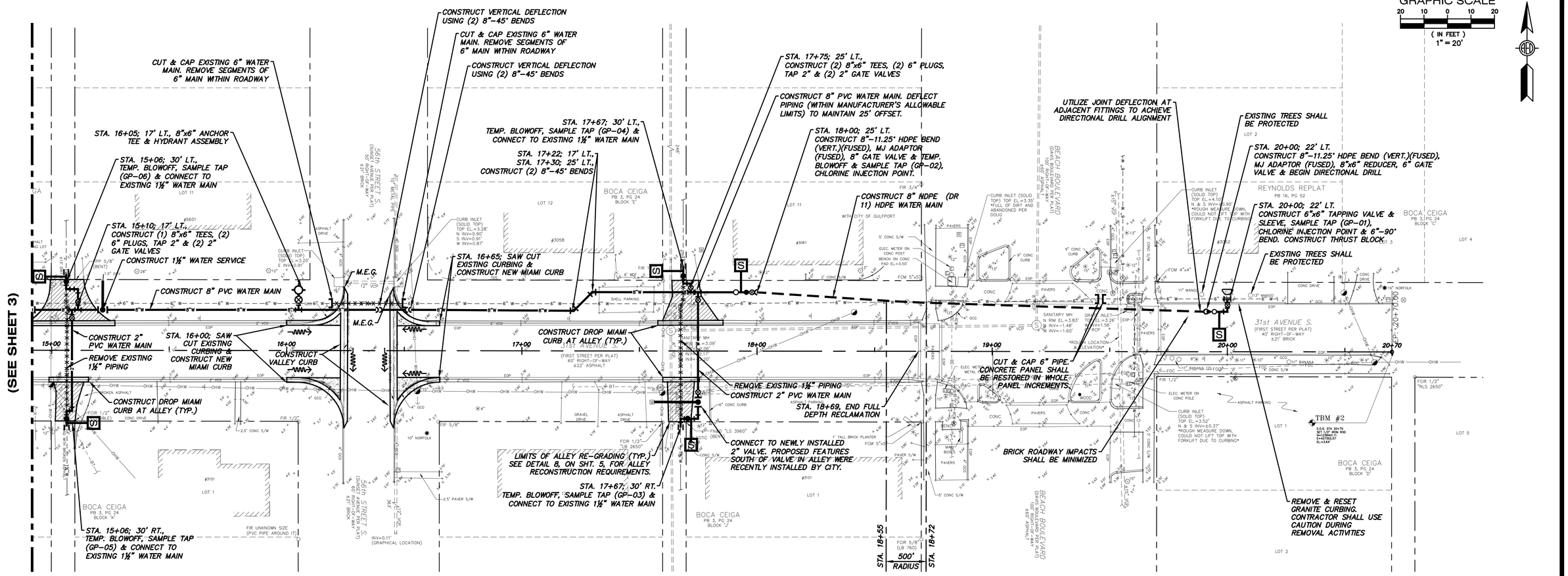

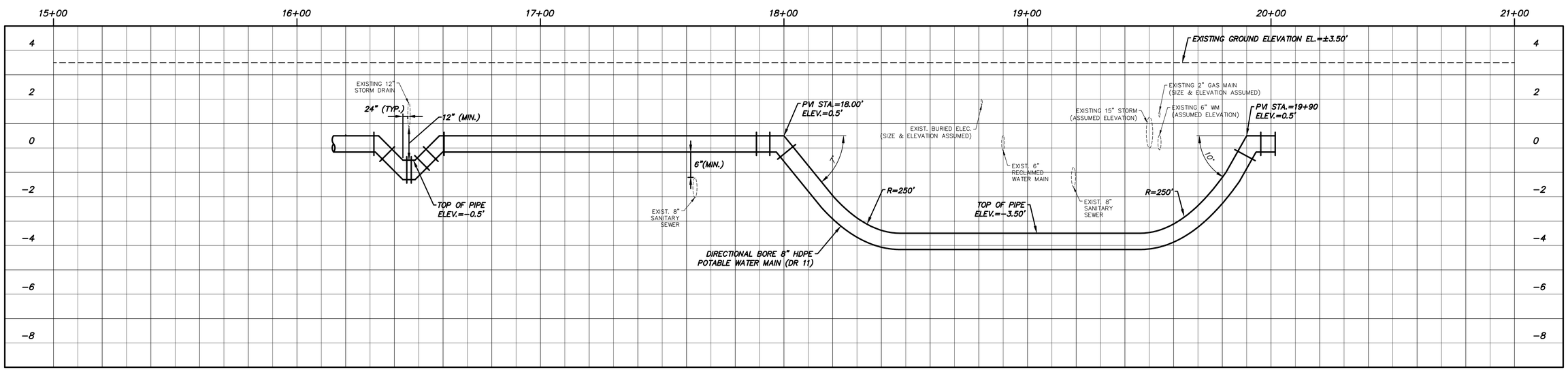

NO.	REVISIONS	BY	DATE

SCALE:	1"=20'
DRAWN:	S.A.T.
DESIGNED:	A.E.D.
APPROVED:	W.G.R.

ADVANCED ENGINEERING & DESIGN, INC.
CIVIL • MUNICIPAL • SITE DESIGN • PERMITTING • PLANNING

CITY OF GULFPORT

31st AVE. ROADWAY & POTABLE WATER IMPROVEMENTS

PLAN VIEW

DATE:	4/18/16
PROJECT NO:	15.GP-53

4

Date: 4/24/2009 11:13 AM Filename: \\AED-SERVER\Shared Folders\CADD\Municipal\Gulfport\15.GP-53 (31st Ave RW & PW Imp)\CADD_Current\03-04 GP-53_Plans.dwg

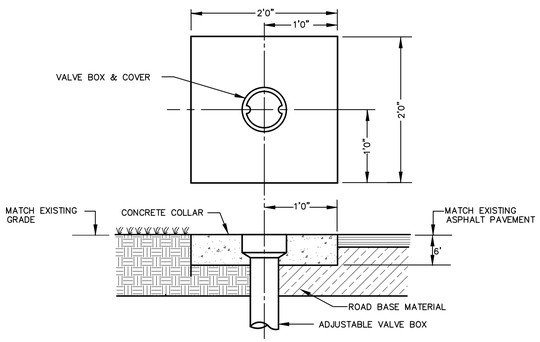

1 VALVE BOX CONCRETE COLLAR DETAIL

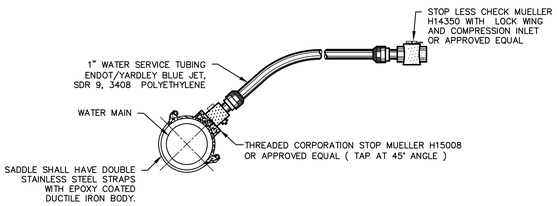

2 WATER MAIN CHLORINATION TAP

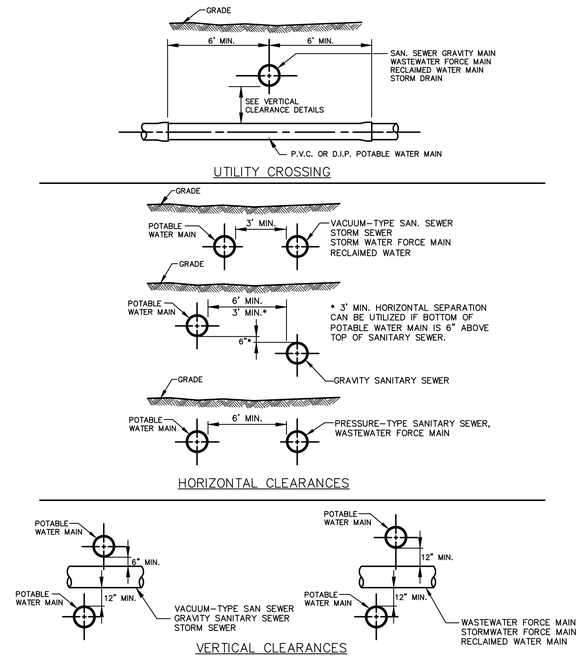

3 WATER MAIN AND SANITARY SEWER CLEARANCES

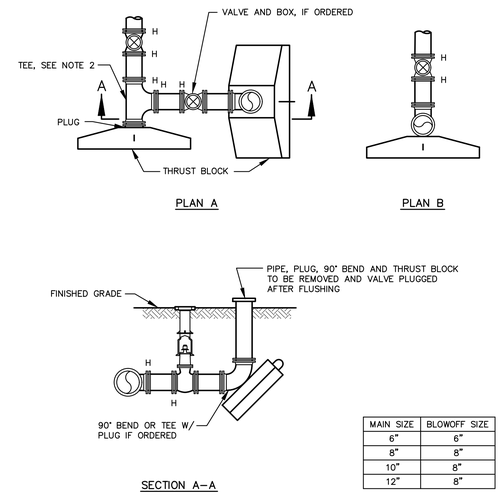

MAIN SIZE	BLOWOFF SIZE
6"	6"
8"	8"
10"	8"
12"	8"

NOTES:
1. FIRE HYDRANT TO BE INSTALLED AFTER FLUSHING , IF ORDERED OR SHOWN.
2. H = HARNESSED JOINT. (MECHANICAL JOINT W/ D.I. RETAINER GLAND, ANCHOR PIPE, AND/OR TEE).

4 6" THRU 12" TEMPORARY BLOW-OFF DETAIL

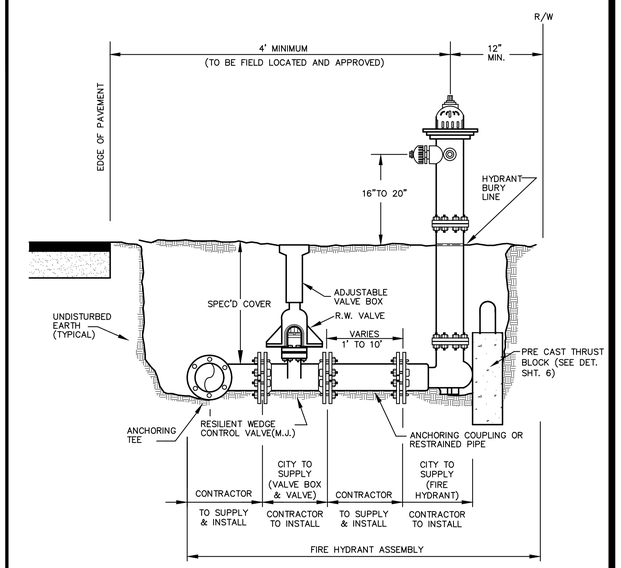

5 FIRE HYDRANT INSTALLATION

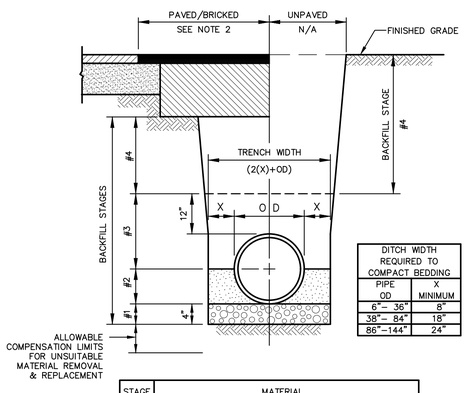

DITCH WIDTH REQUIRED TO COMPACT BEDDING	
PIPE OD	X MINIMUM
6"– 36"	8"
38"– 84"	18"
86"–144"	24"

STAGE	MATERIAL
#1	CLEAN SAND OR STRATA I MATERIAL WITH WATERSTOP @ 100' INTERVALS
#2	PIPE BEDDING: CLEAN SAND OR STRATA I MATERIAL
#3	PIPE BACKFILL: LOCAL AND/OR CLEAN SAND TO 12" ABOVE TOP OF PIPE – (6" LIFTS)
#4	TRENCH BACKFILL: PAVED/BRICK SURFACE – IN 6" LIFTS UNPAVED ROAD – IN 6" LIFTS GRASS SURFACE – IN 12" LIFTS

NOTES:
1. ALL BACKFILL SHALL BE PLACED IN LIFTS AND COMPACTED AS PER SPECIFICATION.
2. SEE DETAIL 8, 9 OR 10 THIS SHEET
3. DEWATERING SHALL BE PERFORMED TO CONSTRUCT THE PIPE IN DRY CONDITITONS

6 PIPE BEDDING DETAIL

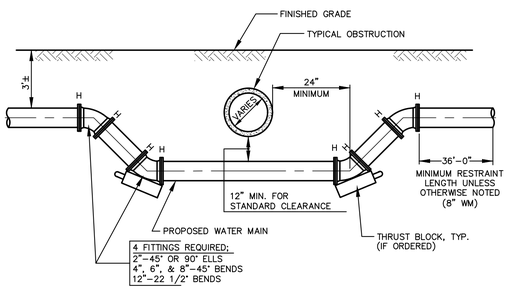

NOTES:
1. FOR 2" THROUGH 12" WATER MAIN.
2. ALL PIPE SHALL BE CUT AND PARTIALLY ASSEMBLED PRIOR TO THE CITY AUTHORIZING SHUTDOWN OF EXISTING MAIN(S) FOR TIE-IN.
3. SHUTDOWN PERIOD SHALL NOT EXCEED THREE (3) HOURS.
4. THE CONTRACTOR SHALL NOTIFY ALL AFFECTED CITY CUSTOMERS PRIOR TO SHUTDOWN.
5. THE CONTRACTOR SHALL SWAB NEW PIPE AND FITTINGS WITH CHLORINE SOLUTION, AS DIRECTED.
6. H = HARNESSED JOINT. (MECHANICAL JOINT W/ D.I. RETAINER GLAND) (NOT APPLICABLE FOR 2" PIPE)
7. VERTICAL ADJUSTMENT MAY BE OVER AN OBSTRUCTION, IF MINIMUM PIPE COVER AND BOTTOM CLEARANCES ARE AVAILABLE.

7 WATER MAIN VERTICAL ADJUSTMENT DETAIL

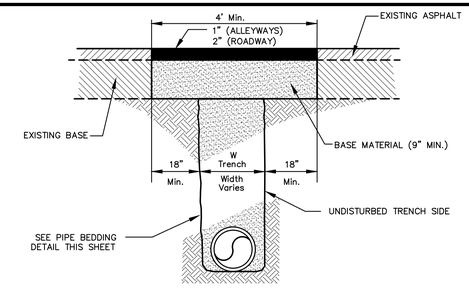

NOTES:
1. BASE MATERIAL SHALL BE LIMEROCK, SHELL, CRUSHED STONE, CRUSHED OR CRUSHED CONCRETE THE EXISTING BASE MATERIAL SHALL MATCH EXISTING BUT BE OF 9" MINIMUM THICKNESS. BASE MATERIAL SHALL HAVE A MINIMUM LBR OF 100.
2. THIS DETAIL IS APPLICABLE FOR THE RECONSTRUCTION OF ALLEYWAYS. HOWEVER, IN LIEU OF ASPHALT, THE ALLEYWAYS SHALL USE CITY-PROVIDED MILLINGS. MILLINGS SHALL BE TRANSPORTED TO THE SITE BY THE CONTRACTOR. THE MILLINGS ARE LOCATED AT 1617 49TH STREET SOUTH.

8 ASPHALT DRIVEWAY & ROADWAY RESTORATION

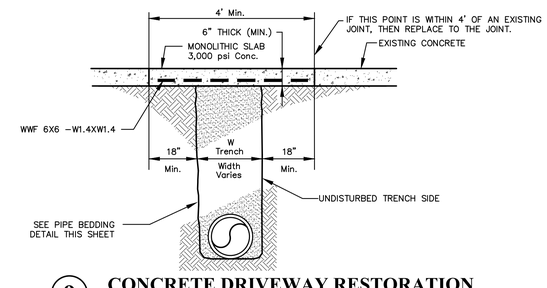

9 CONCRETE DRIVEWAY RESTORATION

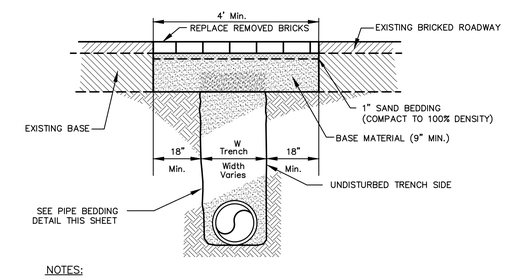

NOTES:
1. BASE MATERIAL SHALL BE LIMEROCK, SHELL, CRUSHED STONE, CRUSHED OR CRUSHED CONCRETE THE EXISTING BASE MATERIAL SHALL MATCH EXISTING BUT BE OF 9" MINIMUM THICKNESS. BASE MATERIAL SHALL HAVE A MINIMUM LBR OF 100.
2. BRICKS SHALL BE HAND REMOVED.
3. BRICKS SHALL BE REPLACED MATCHING THE EXISTING PATTERN, SLOPE & ELEVATION.
4. BRICKS SHALL ROLLED PRIOR TO SAND PLACEMENT (BETWEEN JOINTS).
5. CLEAN SAND SHALL BE PLACED BETWEEN BRICK JOINTS.

10 BRICK ROADWAY RESTORATION

NO.	REVISIONS	BY	DATE

SCALE:	AS SHOWN
DRAWN:	S.A.T.
DESIGNED:	A.E.D.
APPROVED:	W.G.R.

ADVANCED ENGINEERING & DESIGN, INC.
CIVIL • MUNICIPAL • SITE DESIGN • PERMITTING • PLANNING

CITY OF GULFPORT

31st AVE. ROADWAY & POTABLE WATER IMPROVEMENTS

GENERAL DETAILS

DATE:	4/18/16
PROJECT NO:	15.GP-53
	5

Date: 4/23/2009 10:54 AM Filename: \\AED-SERVER\Shared Folders\CADD\Municipal\Gulfport\15.GP-53 (31st Ave RW & PW Imp)\CADD_Current\05 GP-53_GENERAL DETAILS.dwg

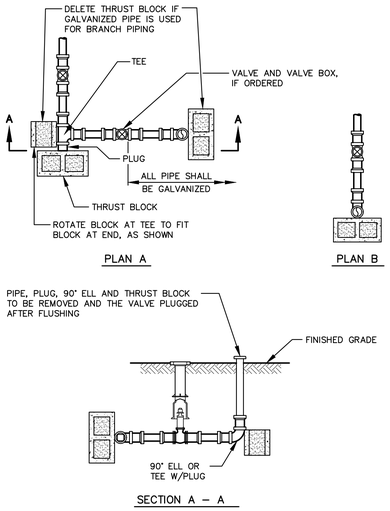

1 2" TEMPORARY BLOW-OFF DETAIL

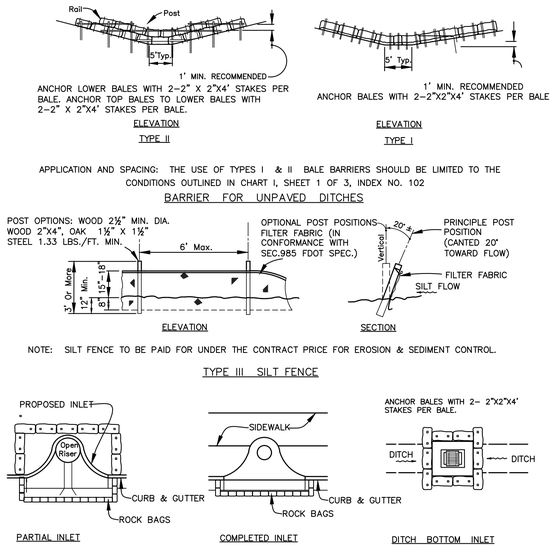

NOTES:

1. EROSION CONTROL DEVICES SHALL BE PROPERLY MAINTAINED THROUGHOUT CONSTRUCTION TO PREVENT THE INFILTRATION OF PROJECT SITE SOILS INTO A PUBLIC DRAINAGE SYSTEM.
2. FOR ADDITIONAL DETAIL, REFER TO F.D.O.T. INDEX #102

2 EROSION CONTROL DEVICES

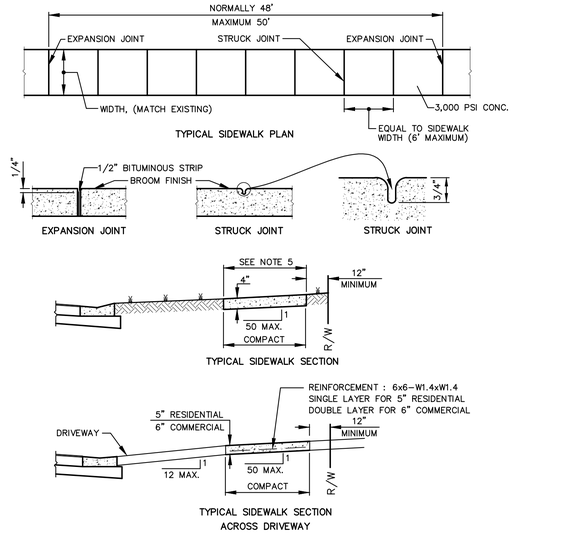

NOTES:

1. SIDEWALKS SHALL HAVE TOOLED EDGES.
2. CONSTRUCTION JOINTS SHALL BE LOCATED AT STRUCK JOINTS OR EXPANSION JOINTS ONLY.
3. EXPANSION JOINTS SHALL BE INSTALLED AS SHOWN AND ALONG EDGE ABUTTING CURB.
4. EXPANSION JOINTS SHALL CONSIST OF CONTINUOUS 1/2" BITUMINOUS EXPANSION STRIP, AS SHOWN.

3 CONCRETE SIDEWALK CONSTRUCTION DETAIL

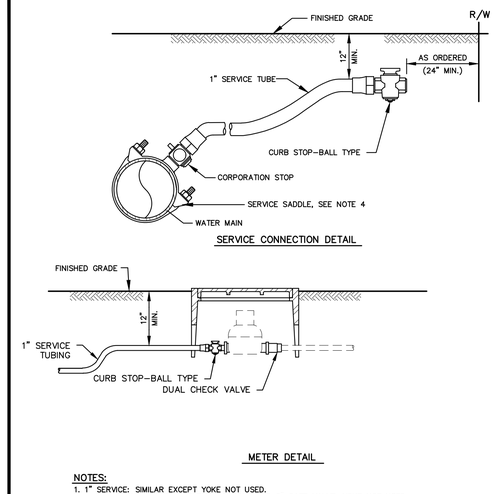

NOTES:

1. 1" SERVICE: SIMILAR EXCEPT YOKE NOT USED.
2. 1–1/2" SERVICE: USE 2" SERVICE SADDLE AND 2" GATE VALVE, YOKE NOT USED.
   A: 1–1/2" FARSIDE SERVICE(S) TO BE 2" UP TO METER, THEN REDUCE TO 1–1/2".
   B: SHORT SIDE SERVICE(S) REDUCE TO 1–1/2" AT GATE VALVE.
3. FOR COMMERCIAL SERVICES USE ABOVE GROUND BACKFLOW PREVENTOR ON USER SIDE.
4. SERVICE SADDLE REQUIRED WITH ALL P.V.C. PIPE, FOR ALL 1–1/2" AND LARGER SERVICE INSTALLATIONS ON D.I.P., AND WHERE SHOWN.

4 RESIDENTIAL WATER SERVICE CONNECTION DETAIL (N.T.S.)

*NOTE: CITY OF GULFPORT TO SUPPLY BACKFLOW ASSEMBLY

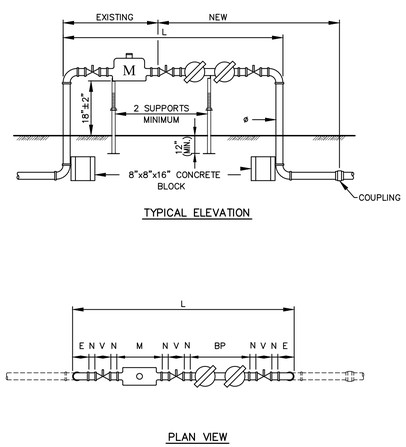

3/4" – 2" WATER SERVICE	
ø	L (MINIMUM)
3/4"	3'–6"
1"	3'–9"
1–1/2"	4'–5"
2"	5'–2"

LEGEND

BP	BACKFLOW PREVENTOR
E	90° THREADED ELBOW
M	METER
N	THREADED ADAPTOR OR NIPPLE
ø	PIPE DIAMETER
V	1/4 TURN BALL VALVE

5 BACKFLOW PREVENTION ASSEMBLY DETAIL

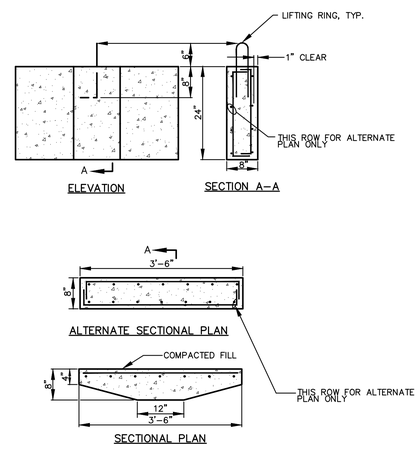

NOTES:

1. BLOCK MAY BE TAPERED OR STRAIGHT, AT THE CONTRACTOR'S OPTION.
2. REINFORCEMENT TO BE : # 4 @ 6" E/W.
3. FLAT SIDE OF THRUST BLOCK SHALL BE PLACED AGAINST SOIL COMPACTED TO 100 % DENSITY.
4. USE WHERE SPECIFIED AND/OR ORDERED. 4" THRU 10" PRESSURE PIPE ONLY.

6 PRECAST CONCRETE THRUST BLOCK DETAIL

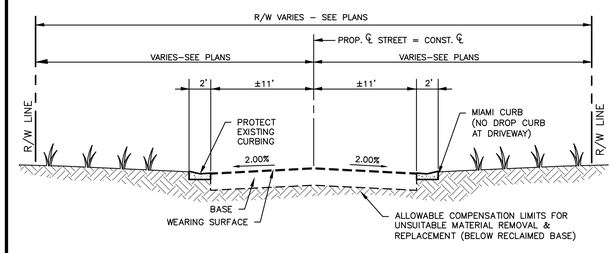

PAVEMENT SPECIFICATIONS	
WEARING SURFACE	2" FDOT TYPE S–III (OR SUPERPAVE EQUIVALENT)
BASE	10" FULL DEPTH RECONSTRUCTION (300 PSI) COMPACTED TO 96% MAX DENSITY PER AASHTO T–180

NOTE:

1. WEARING SURFACE SHALL BE INSTALLED IN TWO (2) 1" LIFTS.

7 TYPICAL ROADWAY SECTION

NOMINAL PIPE SIZE	ELBOWS (DEG.)				VALVE TEE BRANCH	DEAD END
	11.25	22.54	45	90		
4"	2	4	9	21	28	46
6"	3	6	12	29	47	65
8"	4	8	16	38	66	85
12"	4	9	19	45	78	102

8 EXISTING & PROPOSED PIPE RESTRAINT TABLE

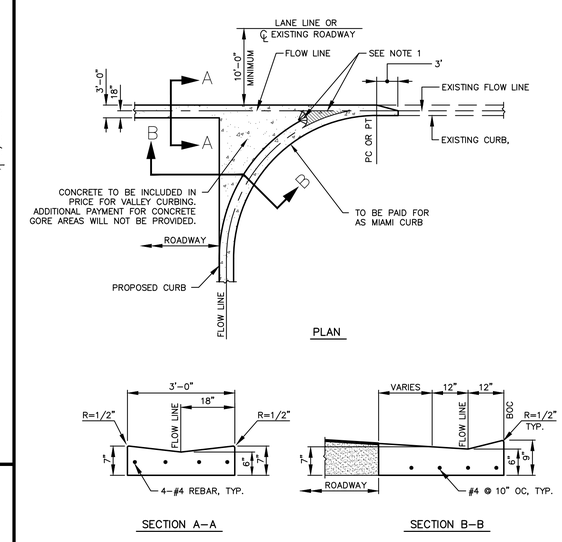

NOTE:

1. CONFIGURATION FOR DIRECTION OF FLOW TO SUIT EACH APPLICATION.

9 VALLEY GUTTER DETAIL

NO.	REVISIONS	BY	DATE

SCALE:	AS SHOWN
DRAWN:	S.A.T.
DESIGNED:	A.E.D.
APPROVED:	W.G.R.

ADVANCED ENGINEERING & DESIGN, INC.
CIVIL • MUNICIPAL • SITE DESIGN • PERMITTING • PLANNING

CITY OF GULFPORT

31st AVE. ROADWAY & POTABLE WATER IMPROVEMENTS

GENERAL DETAILS

DATE:	4/18/16
PROJECT NO:	15.GP-53

6

Date: 4/23/2009 10:54 AM Filename: \\AED-SERVER\Shared Folders\CADD\Municipal\Gulfport\15.GP-53 (31st Ave RW & PW Imp)\CADD_Current\05 GP-53_GENERAL DETAILS.dwg